⑧② 8835 CONCEAL FLOOR HINGE INSTALLATION INSTRUCTION

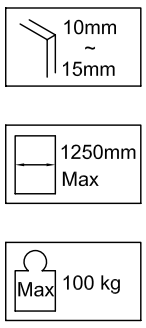

Glass Cutout

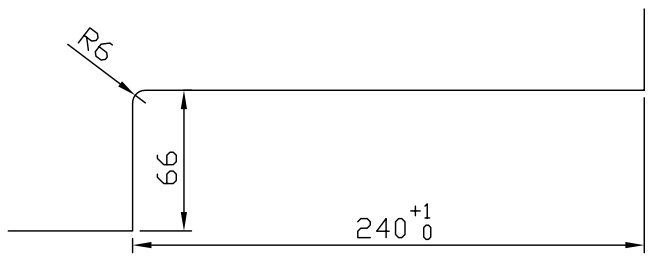

Unit : mm

1

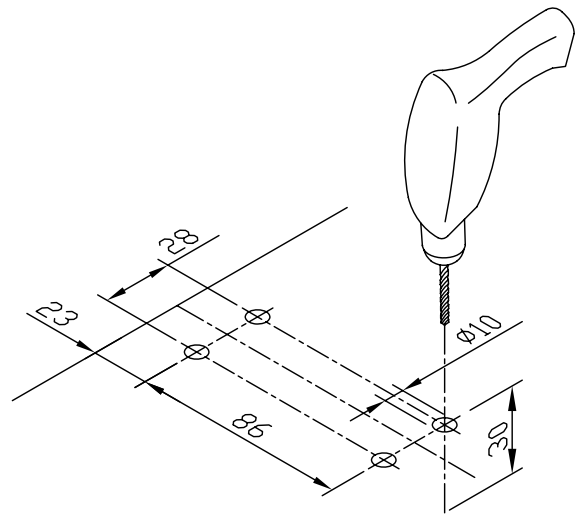

Unit : mm

2

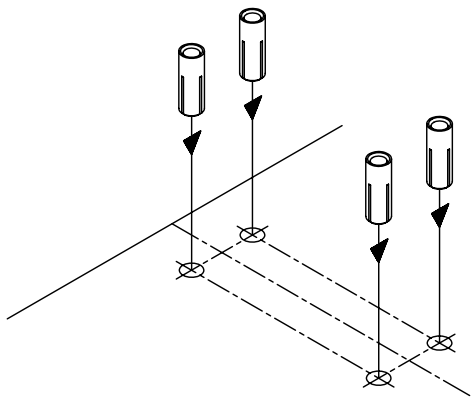

3

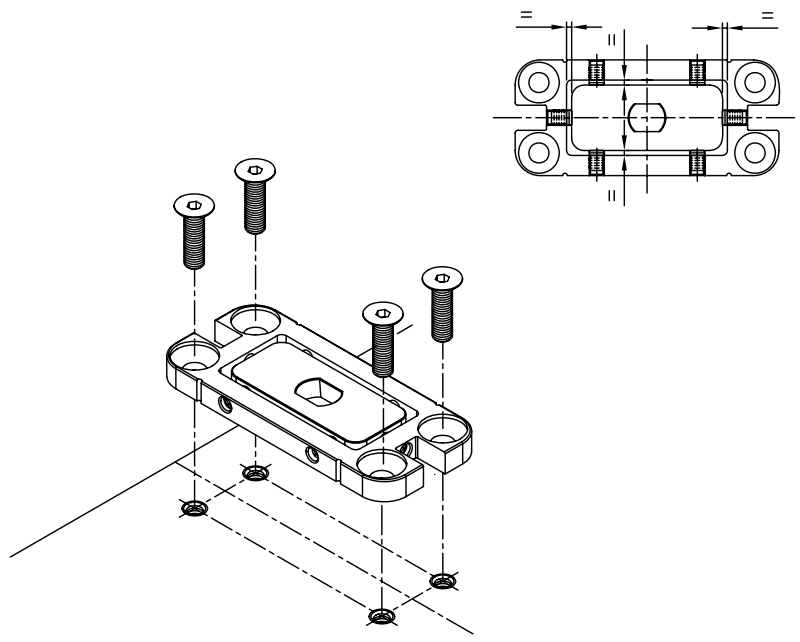

4

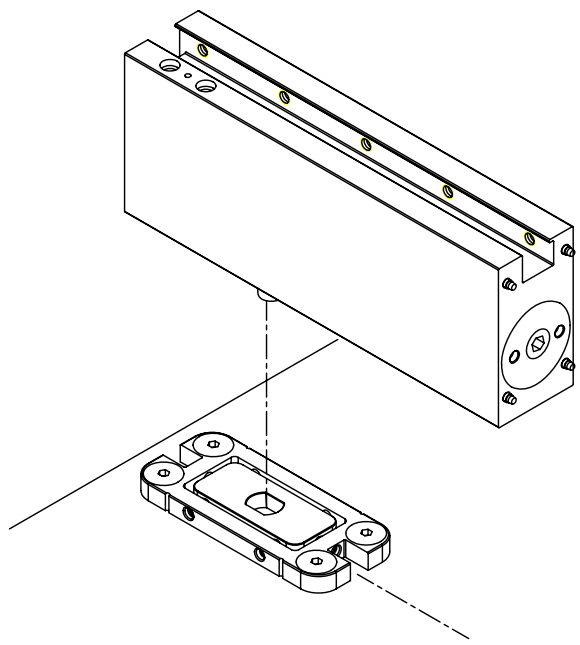

5

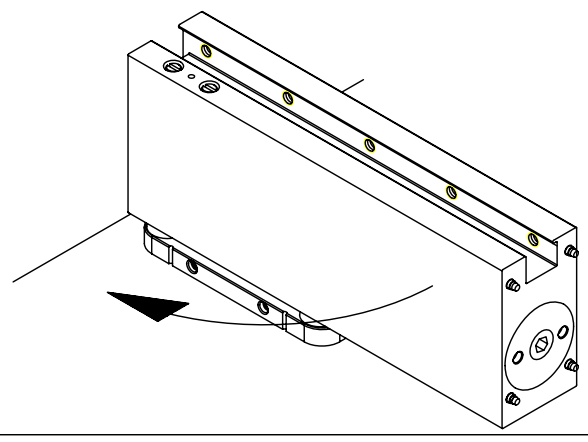

6

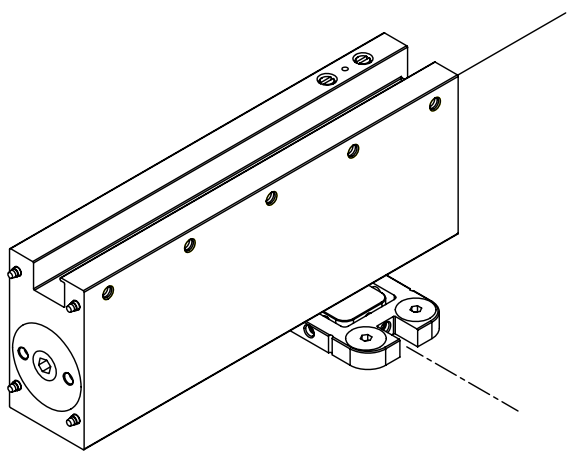

7

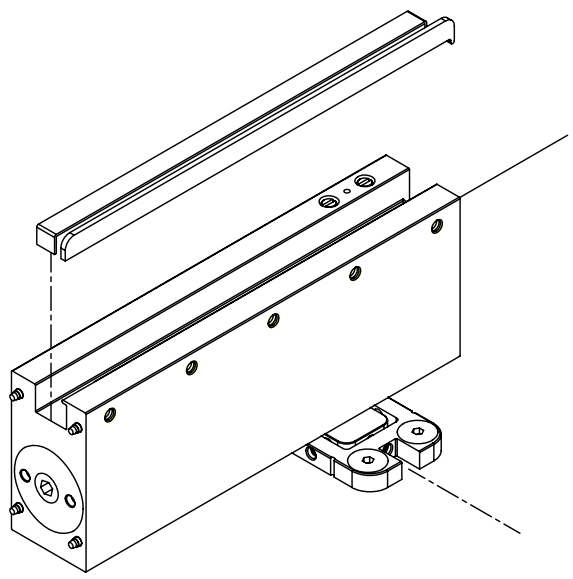

8

8835 CONCEAL FLOOR HINGE INSTALLATION INSTRUCTION

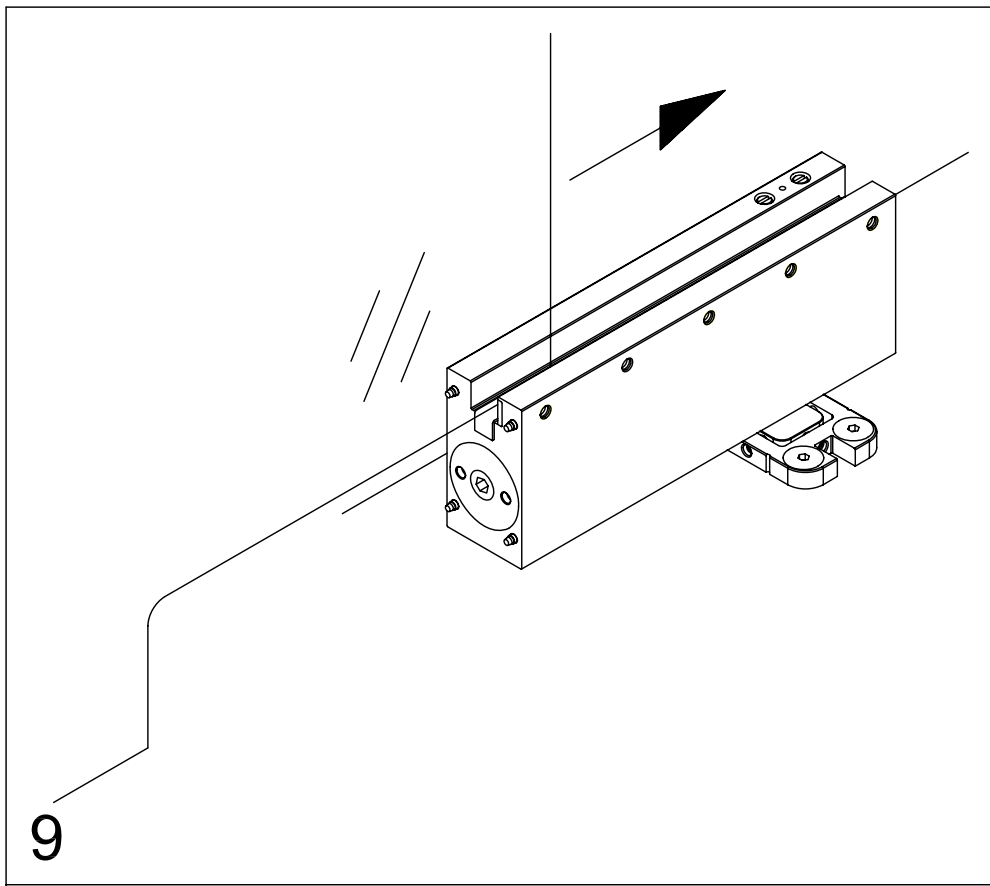

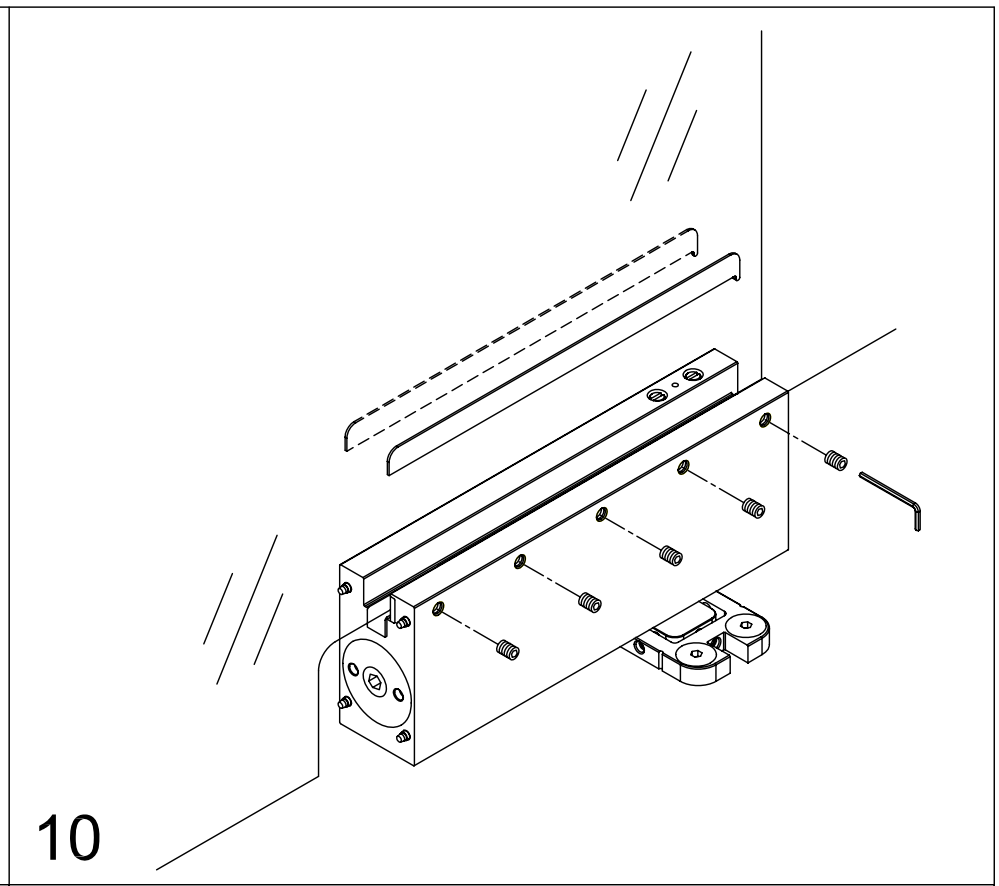

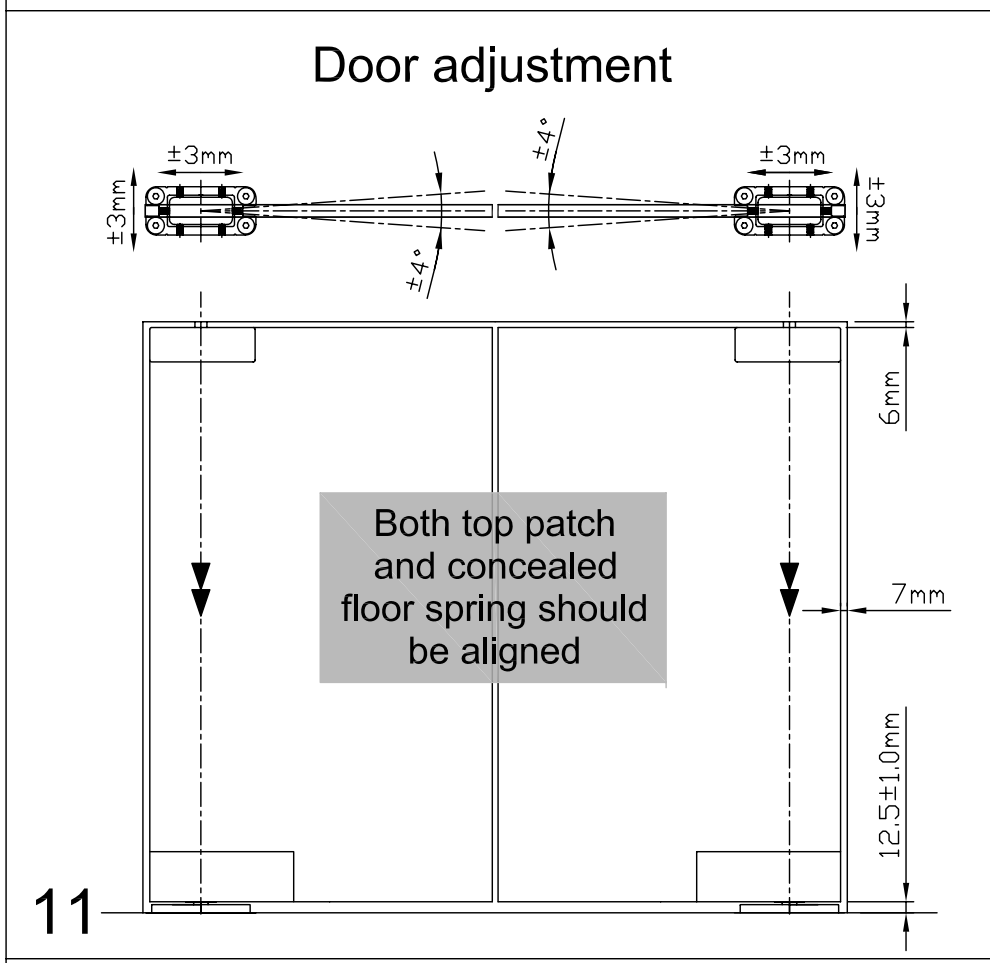

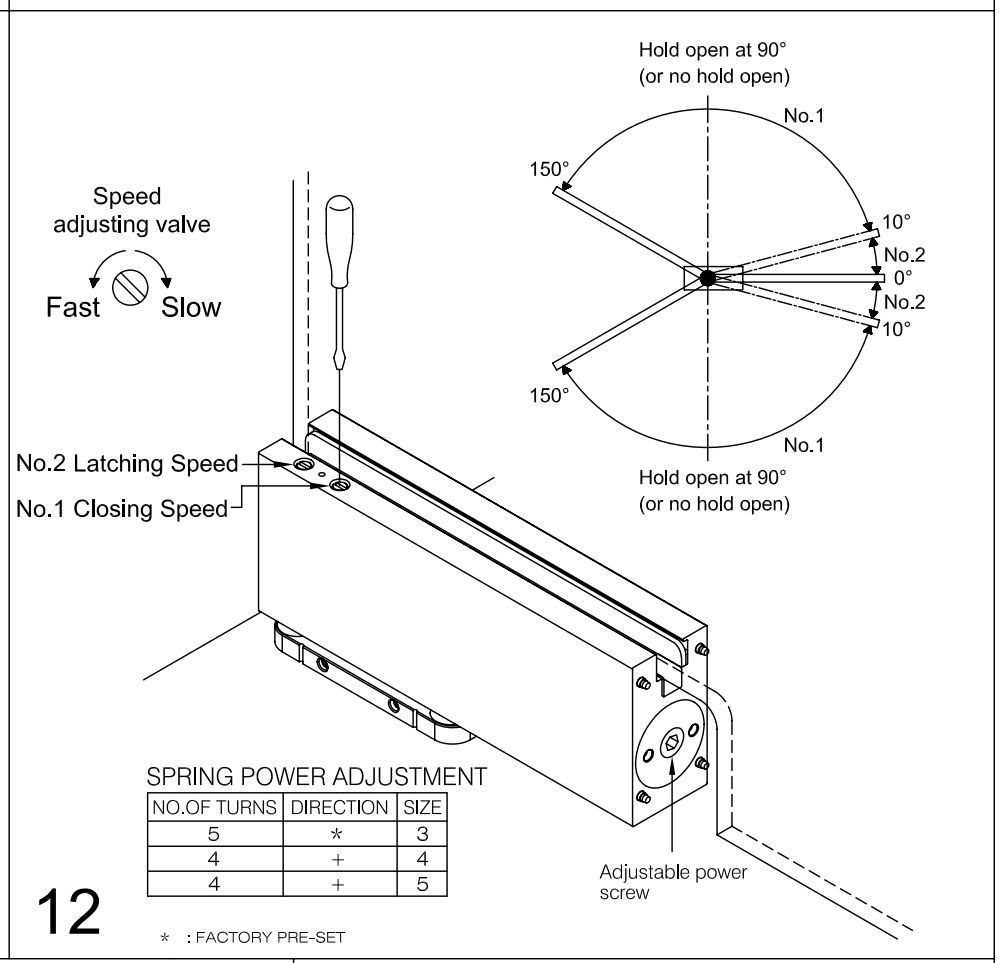

SPRING POWER ADJUSTMENT
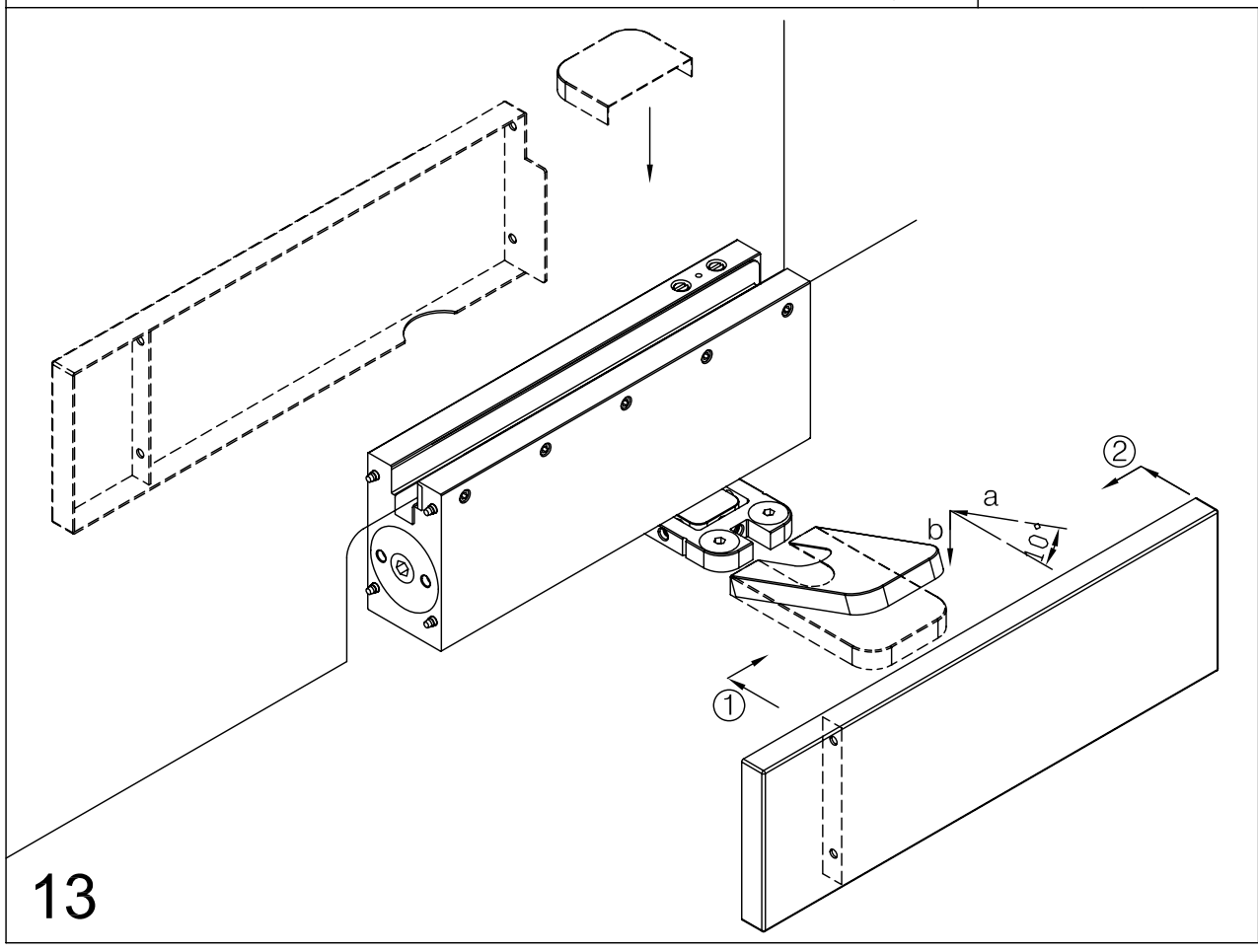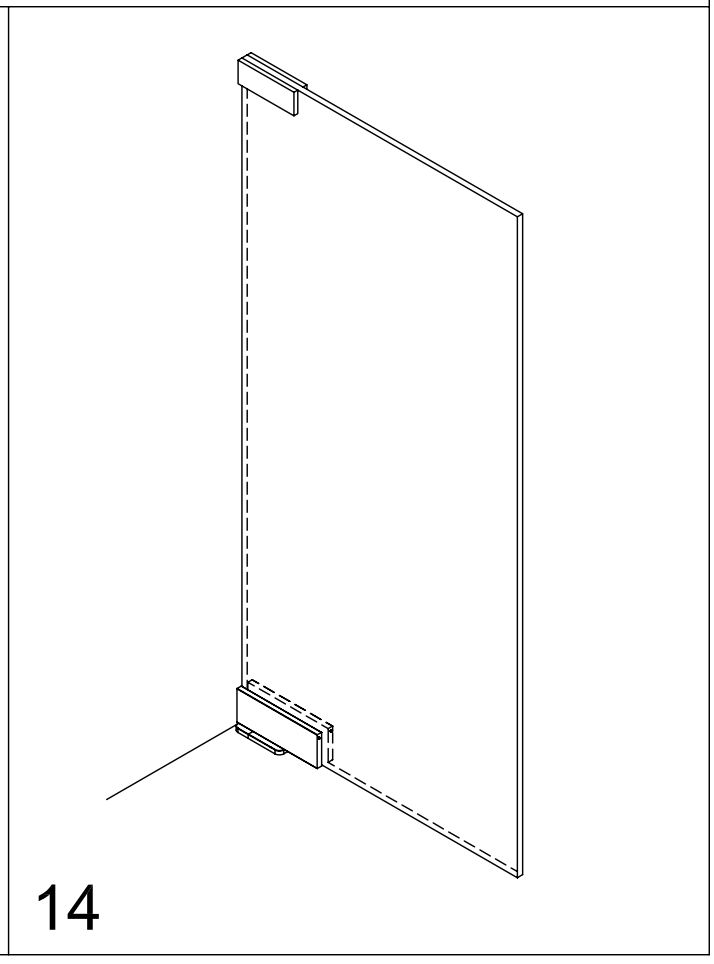
NO.OF TURNS	DIRECTION	SIZE
5	*	3
4	+	4
4	+	5